BRUNSWICK
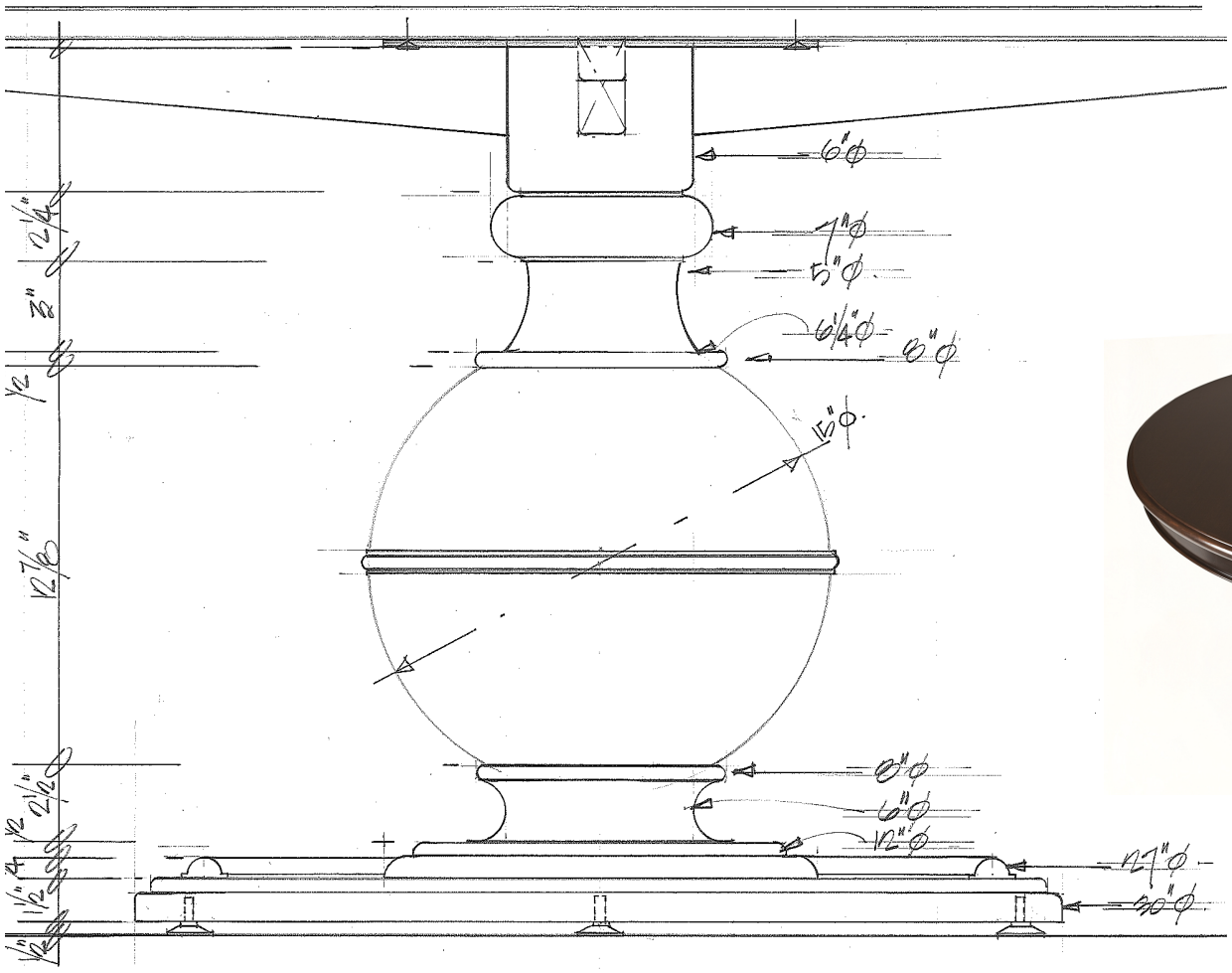
Custom meeting table